COMMUNITY DEVELOPMENT DIVISION
FREDERICK COUNTY, MARYLAND
Department of Permits and Inspections

30 North Market Street • Frederick, Maryland 21701
Phone (301) 600-2313 • Fax (301) 600-2309

BUILDING PERMIT INFORMATION
RESIDENTIAL DECK

Check each box after verifying that requirement is met for submittal.

Submittal Requirements

Verified by Staff:
Date:

1. Completed application form for Residential Uses – Decks, Attachment (A).
2. Two copies of plot plan. See sample, Attachment (B). When at all possible, a legal survey should be used. If a survey is not being used, the plot plan can be drawn by hand. It must be legible and drawn to scale. Plot plan must be on letter or legal size paper, and must include the following:
   - All property lines and property line dimensions
   - Square footage or acreage of the property
   - Building Restriction Lines (BRL) and utility easements
   - North direction arrow
   - Scale of drawing
   - Property Owner name(s)
   - Street Address of property
   - Existing dwelling and any other existing structures
   - Existing well if property is served by well.
   - Existing septic area if property is served by septic.
   - Existing driveway
   - Detailed dimensions of the proposed new construction.
   - Proposed new construction location with setbacks from the proposed new construction to property lines and/or the nearest structure IN EACH DIRECTION.
3. Two (2) sets of framing plans, per requirements noted in Attachment (C) Decks.
4. Print out from the Maryland Department of Assessments and Taxation Real Property Data website www.dat.state.md.us.
5. When property is within an incorporated town, paperwork from the town is required before a permit application may be submitted. Contact the town for details.
6. Fees are due at time of application:

Deck ***500 sf or less***	-OR-	Deck ***Over 500 sf***
$ 10.00 Automation Enhancement Fee		$ 10.00 Automation Enhancement Fee
$ 25.00 Filing Fee		$ 25.00 Filing Fee
$ 82.00 Building Fee		$ 105.00 Building Fee
$ 40.00 Zoning Review Fee		$ 40.00 Zoning Review Fee
$157.00 TOTAL PERMIT FEE		$180.00 TOTAL PERMIT FEE

and

$50.00 Health Review Fee if property is served by well and/or septic.

Notarized Letter of permission – the owner or licensed contractor must apply unless the applicant has a notarized letter of permission. The notarized letter of permission must be from the land owner, unless the permission is for a permit service to act on behalf of the contractor, and then the letter will be from the contractor giving permission to the permit service to act as an agent on their behalf.

Incorporated Towns: Same, except no Zoning Review fee; no Health Review fee unless indicated.

Walk-through Permit fees: Fees are the same as above, except there is no Health Review Fee.

Procedures

STEP ONE – APPLY FOR THE PERMIT

Where to apply: Applications are accepted in the Department of Permits and Inspections, at the above address.
When Applications Are Accepted: Applications are accepted Monday through Friday, (excluding County holidays) between 8:00am and 3:30pm. To ensure adequate time to complete your submittal, please apply prior to 3:00 pm. Walk-Through Permit applications are accepted between 8:00am and 3:00pm, Monday through Friday.

STEP TWO – OBTAIN REVIEW APPROVALS

During processing, the permit application will be reviewed by various agencies for their approval. It is important that you check status of the application and address any concerns or requests for additional information promptly.
Plan Review Timeframes:

- Walk-Through Permits. When the property is not served by individual well or septic, and the property is not within an incorporated town, the application may be considered for processing as a Walk-Through Permit. Walk-Through Permit applications are accepted, reviewed, and issued within the same day, usually within hours.
- Conventional Permits. When an application is not eligible for walk-through processing, the review timeframe of the application by Plan is one week for their initial review comments for this type of application.

Agency Review Status: Review timeframes for agencies outside of the Division of Permitting and Development Review may vary. If additional information is requested by any reviewing agency during processing, a notification is mailed to the applicant. Up-to-date review status may also be obtained via the Frederick County Government website www.FrederickCountyMD.gov/DPDR.
Permit Issuance:

- Walk-Through Permits. When all reviews are completed, the approved permit packet will be prepared and issued when the applicant returns from obtaining approvals.
- Conventional Permits. The issued permit will be mailed out to the applicant usually within 24 hours of issuance. The issued permit may be held for applicant pick-up if requested.

The issued Building Permit packet will contain the permit copy, the permit placard to post on the property, inspection procedures, and additional information.

STEP THREE – OBTAIN INSPECTION APPROVALS

Inspections: The permit packet will contain valuable information regarding the inspection procedures, as well as one set of the reviewed construction plans to be kept onsite. Please read all information included in the packet when you receive it, so your inspection process goes as smoothly as possible.
Certificate of Completion: The end result of the permitting process is the issuance of the Certificate of Completion. The Certificate of Completion is issued when all final inspections have been approved and the construction has been approved for use. It is mailed to the applicant of the Building Permit.

OTHER GENERAL INFORMATION REGARDING BUILDING PERMITS

- All fees must be paid at time of application, by check, cash or credit card (fees apply to all credit and debit card transactions). Permit fees are calculated for each permit application. Each structure, use or permit type require a separate permit application.
- Building fee is charged according to the square footage of the deck. Any increment of a foot is dropped from the measurements.
- Building Permits are non-transferable and non-assignable.
- Electrical and Plumbing Permits are separate permits with separate fees. The licensed person, or a property owner that passes a Homeowner Electrical or Plumbing Exam and is going to do the work applies for these permits.
- *Time Limitation of Application*: An application for a permit for any proposed work shall be deemed to have been abandoned six months after the date of filing, unless such application has been pursued in good faith or a permit has been issued; except that the Building Official is authorized to grant 1 or more extensions of time for additional periods up to 1 year each. The fee to extend a permit application or a building permit is the minimum permit fee of $45.00. Each request to extend a permit shall be made in writing with justification and received *in advance* of expiration date.
- *Refunds*: Filing fees are non-refundable and non-transferable. In the case of an abandonment or discontinuance of a project that has been made and, upon cancellation, 50 percent of the fee paid, less the minimum fee may be refunded, provided (1) No construction has occurred, and (2) The request for refund is received prior to the expiration date of the permit. The request must be made on a form provided by the County. Revoked, suspended, expired or invalid permits are not eligible for refunds.
- *Revisions:*
    - Revisions to a permit or application are $25.00.

CONTACTS FOR BUILDING PERMIT APPLICATIONS

General Information 301-600-2313
Customer Service Supervisor, Building Permits (processing or fee questions).....301-600-1089
Plan Reviewer (for construction plans) 301-600-1086
Zoning Reviewer (plot plans, setbacks, use, flood plain, building height) 301-600-1143
Environmental Health (well and septic information) 301-600-1726
Acting Manager of Permitting Services 301-600-1089

ATTACHMENT (A) - DECK

FREDERICK COUNTY COMMUNITY DEVELOPMENT DIVISION
DEPARTMENT OF PERMITS AND INSPECTIONS
30 NORTH MARKET STREET
FREDERICK, MARYLAND 21701
301-600-2313 INFORMATION

A/P #
Process Date:
Application Reviewed By (initials):

Building Permit Application for DECK

SECTION I: CONTACT INFORMATION

Property Owner			Home Improvement Contractor		
Name(s) of person (s) deck is being constructed for:			*Contractor must apply when contracted to do work.*		
Current street address for above person(s):			*MHIC license number:*	*Exp Date:*	
Town:	*State:*	*Zip:*	*Current street (mailing) address for Contractor:*		
Owner telephone Number: *(please give the best number to reach owner during the day)*			*Town:*	*State:*	*Zip:*
Permit Service			*Contact Person for Contractor:*		
Name of Permit Service when applicable:			*Contractor Telephone Number:* *Fax #*		
Street (mailing address) :			*Contractor e-mail Address:*		
Town:	*State:*	*Zip:*			
Contact Person for Permit Service (Applicant/Contact)					

SECTION II: PROPERTY INFORMATION

Current Property Owner(s):			*Property Address Where Deck is to be Constructed:*		
Eight Digit Property Tax ID (account) #			*Town:*	*State:*	*Zip:*
Acreage or Square Footage of Property:			*Subdivision Name:*		*Lot #*
Water Type : Well ☐ Community ☐	*Sewer Type :* Septic ☐ Community ☐		*Is Property Within an Incorporated Town?* Yes ☐ No ☐		

Is there a roadside tree that will be disturbed or removed due to the proposed construction?(A roadside tree is defined as a plant that has a woody stem or trunk that grows all, or in part, within the right-of-way of a public road.)
Yes ☐ No ☐

Walk-Through Permits
When property is served by public water and sewer, *and* property is not within an incorporated town, application may be eligible to be processed as a walk-through permit. If you would like to process this application as a walk-through, please check here: ☐

BUILDING PERMIT APPLICATION FOR DECK - PAGE TWO OF TWO

Cost of Construction: _____
includes electrical, plumbing, labor & materials

Dimensions of Deck (each level)

ft	**X**	ft
ft	**X**	ft
ft	**X**	ft

Steps to Grade? Y or N _____

Total square footage of deck: _____

Setbacks From Deck to Property Lines/or Nearest Structure in Each Direction (3 required):

Front _____
Rear _____
Left _____
Right _____

Any Electrical Work Involved Y or N _____
Any Plumbing Work Involved Y or N _____

OTHER INFORMATION CONCERNING THE CONSTRUCTION THAT WILL ASSIST IN PROCESSING

IMPORTANT - PLEASE READ CAREFULLY

The Applicant hereby certifies under the penalties of perjury, and agrees as follows: 1) That he/she is authorized to make this application, 2) that the information is correct, 3) that he/she will comply with all regulations of Frederick County which are applicable hereto, 4) that he/she will perform no work on the referenced property not specifically described in the application: 5) that he/she knows that this permit does not include electrical or plumbing work: electrical and plumbing work requires a separate permit. Any change without approval of the agencies concerned shall constitute sufficient grounds for the disapproval of a permit. The appropriate revision fee shall be charged.

Permit Application Extension:
The permit application is valid for 6 months. The fee to extend an application is the minimum fee. The request must be made in writing prior to the expiration date, with justification. Each extension for an application shall not exceed 6 months.

Properties Served by County Water and Sewer:
It is the applicant's responsibility to identify and disclose any water and/or sewer utilities or easements, in, on, or near the proposed improvements. Approval of ths permit by DUSWM shall not, on behalf of the BOCC, be construed as a modification or amendment of any water or sewer easement nor constitute permission to encroach thereon. Should an encroachment be found in the future, the cost to remedy said encroachment shall be borne by the property owner.

Signature of Applicant _____

Please print name _____

Connection with application _____

7/1/2013

SAMPLE PLOT PLAN :

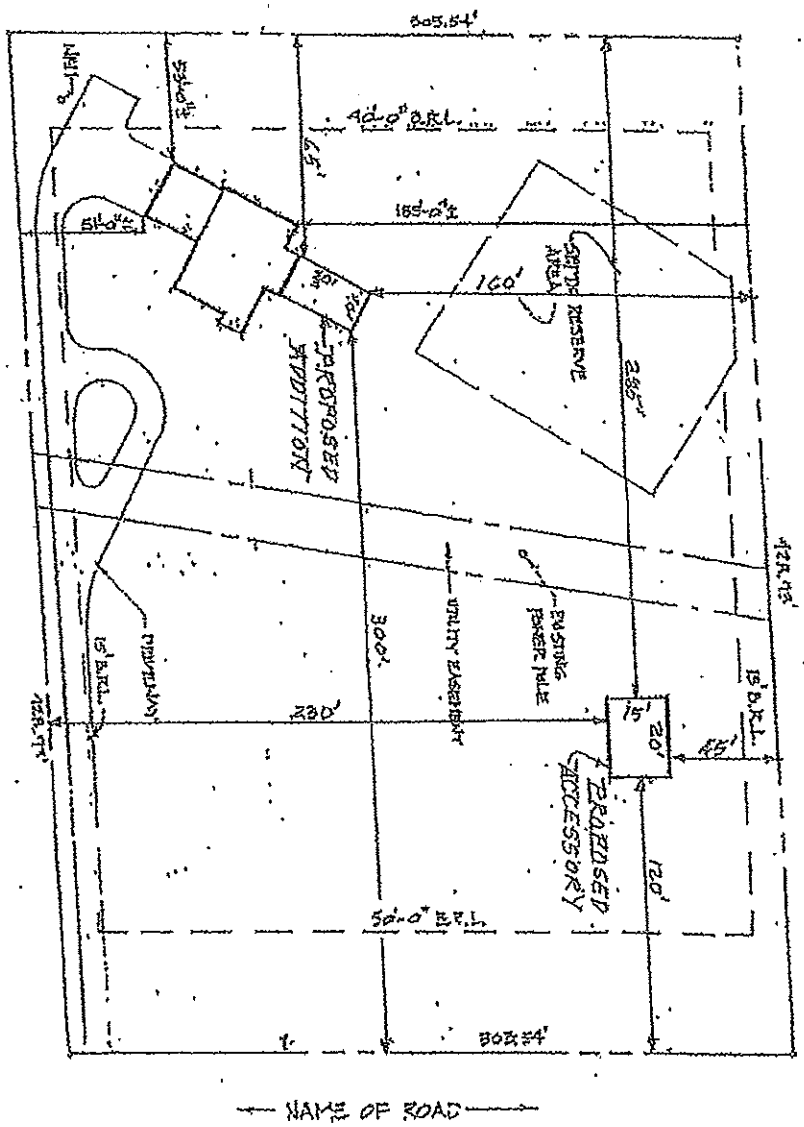

SUBDIVISION NAME:		OWNER/APPLICANT NAME:	DRAWING SCALE:
LOT #:	LOT SIZE:	PROPERTY ADDRESS:	PROPERTY TAX I.D. NO.

DECK INFORMATION GUIDE

FREDERICK COUNTY DEPARTMENT OF PERMITS AND INSPECTIONS
30 NORTH MARKET STREET FREDERICK, MD 21701 (301) 600-1086
(This guideline assumes all lumber to be preservative-treated Southern Pine.)

1. GENERAL:
-Deck structures shall be designed for a minimum 40 lb. per sq. ft. live load.
-All wood should be preservative-treated or an approved alternative.
-Fasteners and connectors for preservative-treated wood shall be of hot dipped, zinc-coated galvanized steel, stainless steel, silicon bronze or copper. (See R317.3.1 of the IRC)
-Any alternate decking, guard, and handrail material used must be approved by Frederick County.

2. PLANS:
-2 sets of plans drawn to scale showing all proposed levels are required. Framing plans need to clearly show each level. Computerized plans from Home Centers/Lumber Yards with separate material list will not be accepted unless the framing plans have the structural elements clearly labeled on the drawings themselves.

3. FOOTINGS:
-Poured concrete footings should be a minimum of 8" wider than the posts (4x4 post - 12" min. width, 6x6 post - 14" min. width). Certain loading conditions may require larger.
-The bottom of footings must be a minimum of 30" below finish grade level.
-Footings must be a min. of 8" thick poured concrete below bottom of post.
-Suggest footings be placed at least 36" away from the house foundation to avoid the backfill area.

4. POSTS:
-Post can be set directly on the footing with tamped back-fill, enclosed in concrete below grade, or on top of a pier at grade with an approved post anchor.
-Posts should be a minimum 4x4 lumber size. Recommend using 6x6 lumber size for posts over 8'-0" tall.
-For posts over 10'-0" tall cross bracing is recommended.

5. BEAMS:
-Beams must be securely connected to the posts and joists with hardware & appropriate fasteners.
-For maximum beam span between posts see Table 1.
-Note: Certain framing conditions may change those allowable spans.

6. JOISTS:
-Joists can be set in hangers on the face of the beam or cantilevered over the top of the beam.
-For best strength the maximum joist cantilever distance should not exceed:

2 x 8's: 2' 2 x 10's: 3' 2 x 12's: 4'

7. LEDGERS:
-Ledgers should be the same size lumber as the joists or larger (min. 2 x 8) and shall be properly bolted to solid structural material of the house (not sheathing). See 'Ledger Fastener Schedule' table below.
-Decks or a portion thereof are required to be self-supporting when attaching to an existing house cantilever. Also, if the house band board cannot be verified as structurally adequate, then the deck must be freestanding.

LEDGER FASTENER SCHEDULE

JOIST SPAN	6' or less	6'1"-8'	8'1" - 10'	10'1"-12'	12'1"-14'	14'1"-16'	16'1"-18'
Connection Details	On-center spacing of fasteners						
1/2 inch diameter lag screw with 15/32 inch maximum sheathing	30	23	18	15	13	11	10
1/2 inch diameter bolt with 15/32 inch maximum sheathing	36	36	34	29	24	21	19
1/2 inch diameter bolt with 15/32 inch max. sheathing & 1/2 in. stacked washers	36	36	29	24	21	18	16

8. DECKING:

-When using different size/thickness of lumber or composite material follow the manufacturer's recommendations.

-Suggestion: To strengthen the deck structure, the decking may be set a at 45 degree angle across the joists.

9. RAILS:

-Guards on decks shall be a minimum of 36" in height above the deck surface and are **required** on decks over 30" above grade or level below. Railing systems shall be able to resist a concentrated load of 200 lbs. on or against the top rail at any point and direction.

-Guard in-fill components shall be designed to withstand a horizontally applied normal load of 50 lbs. per sq. ft.

-Guards on stairs must be 34" minimum height above the tread nosing if the stairs are 30" above grade.

-Balusters/pickets shall have no more than a 4" space between them on level surfaces and no more than 4 3/8" spaced along the run of stairs.

-The triangular openings at the open side of stair shall not allow passage of a sphere 6 inches in diameter.

-Continuous graspable handrails on stairs shall be between 34" and 38" above the tread nosing (measured vertically) and are **required** on stairs of 4 or more risers. The handgrip portion shall have a circular cross section of 1 ¼" minimum to 2" maximum.

10. STAIRS:

-Minimum stair width is 3' at all points above handrail and below required minimum height.

- Max. riser height is 7 3/4". Max. riser opening is 4" when more than 30" above floor or walking surface.

- Min. tread depth is 10" measured horizontally from the leading edge to leading edge. (Nosing not required if tread is min. 11").

-The greatest riser height/tread depth within any flight of stairs shall not exceed the smallest height/depth by more than 3/8" (Tread and riser dimensions cannot exceed min./max. of above items respectively).

-2 x 12 stringers on stairs are required to be a maximum of 24" O.C.

-All interior and exterior stairways shall be provided with a means to illuminate the stairs, including the landings and treads.

TABLE-1				
Max Beam Spans Between Posts- #2 Southern Pine				
Joist Span	(2) 2x6	(2) 2x8	(2) 2x10	(2) 2x12
6'	9'	11'	14'	16'
8'	7'	10'	12'	14'
10'	7'	9'	10'	12'
12'	6'	8'	10'	14'
14'	6'	7'	9'	10'
16'	5'	7'	8'	10'
With 2' Cantilever				
6' + 2'	7'	9'	11'	12'
8' + 2'	6'	8'	10'	11'
10' + 2'	6'	7'	9'	10'
12' + 2'	5'	7'	8'	10'
14' + 2'	5'	6'	8'	9'
16' + 2'	5'	6'	7'	9'

TABLE-2		
Maximum Joist Span - #2 Southern Pine		
Joist Size	Joist Spacing	Max Span
2x6	12" o.c.	10'-9"
	16" o.c.	9'-9"
	24" o.c.	8'-6"
2x8	12" o.c.	14'-2"
	16" o.c.	12'-10"
	24" o.c.	11'-0"
2x10	12" o.c.	18'-0"
	16" o.c.	16'-1"
	24" o.c.	13'-1"
2x12	12" o.c.	21'-9"
	16" o.c.	18'-10"
	24" o.c.	15'-5"

Code References:
ICC International Building Code 2012
ICC International Residential Code 2012

Standard Deck Construction Information

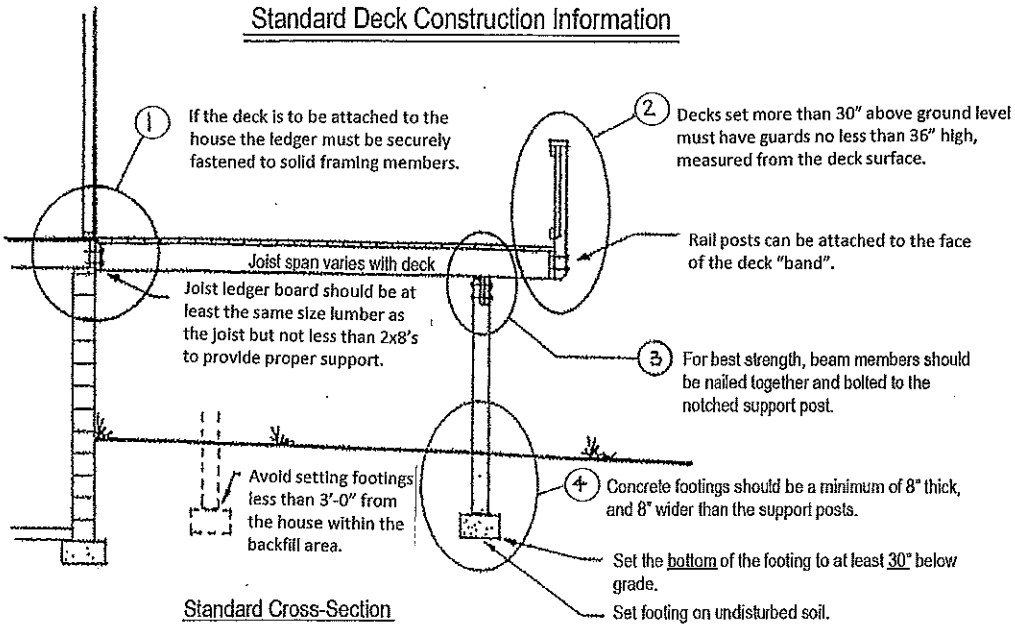

Standard Cross-Section

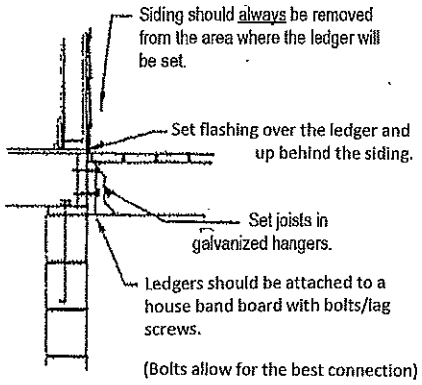

1 Ledger Detail
Shown for Frame/Siding Condition

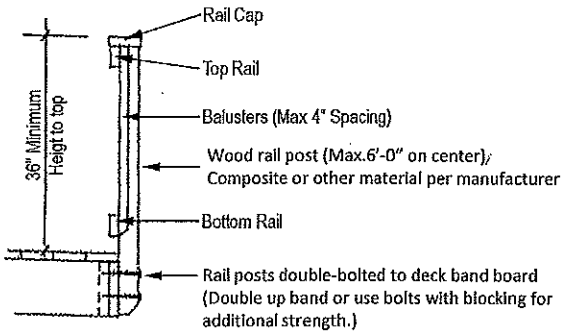

2 Railing Detail
Typical Detail - Many Variations Available

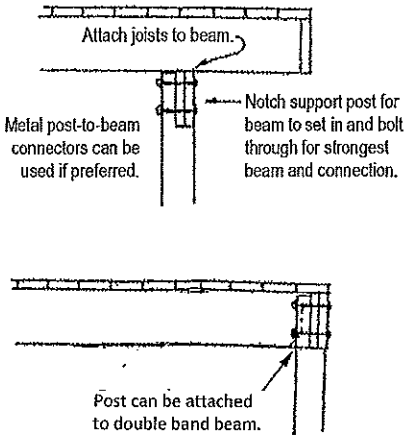

3 Beam/Post Detail

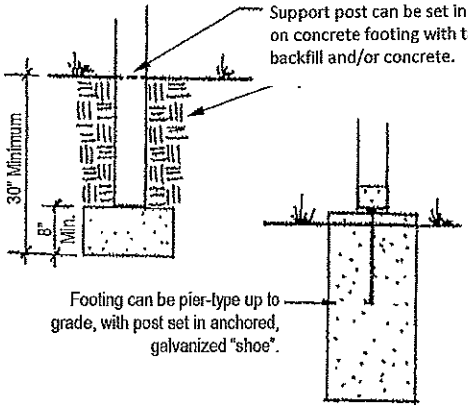

4 Footing Detail

Revised (July 1, 2012)

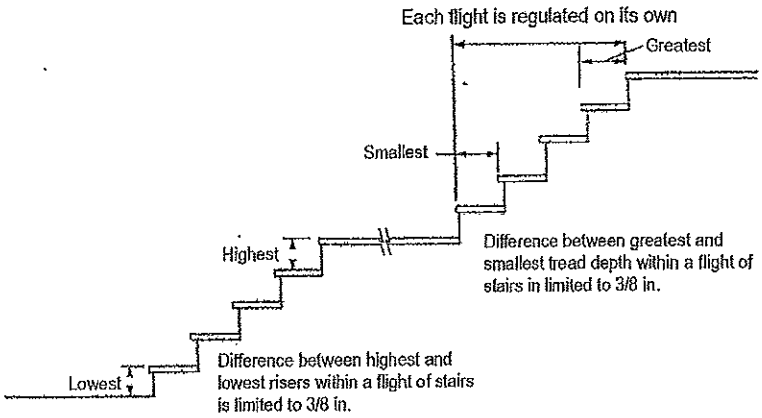

Stair Tolerances

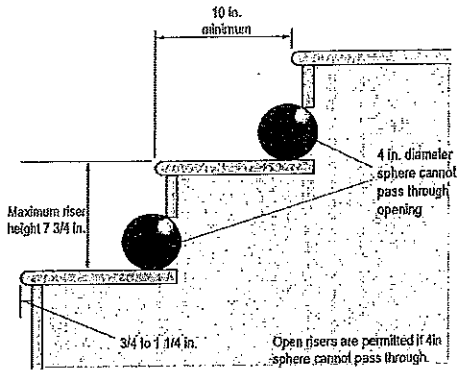

Tread/Riser Profile
(Open Tread)

Handrail/Guard

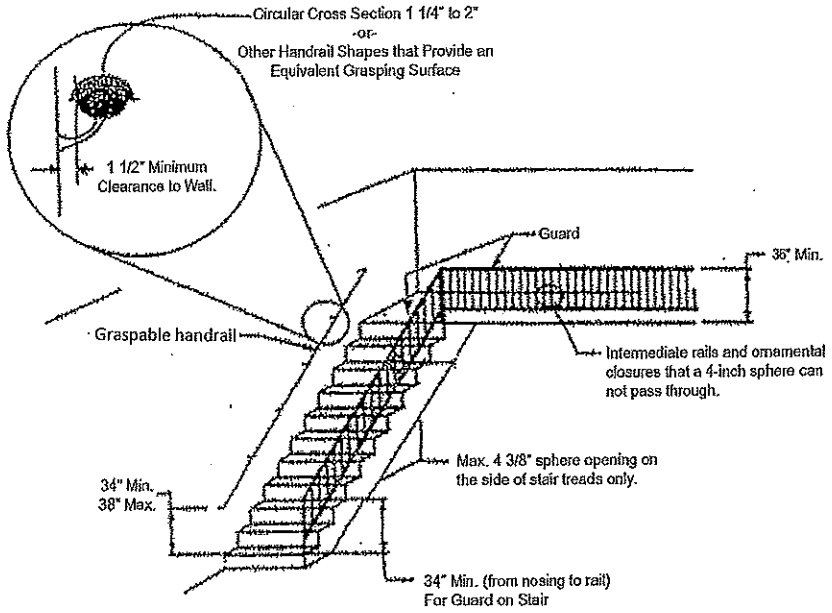

If a stairway has four or more risers, then the stairway requires a graspable handrail on at least one side.

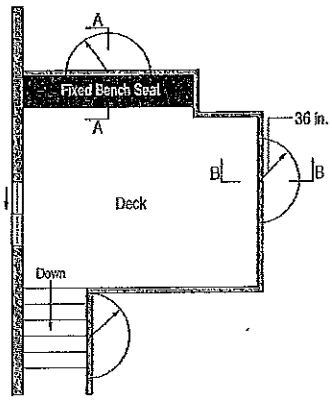

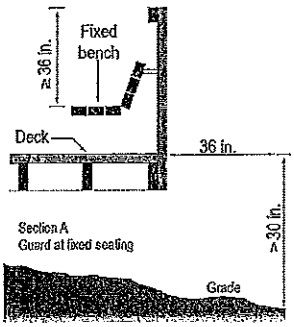

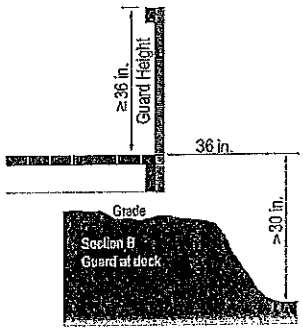

A LIST OF APPROVED PRODUCTS FOR USE AS DECKING & RAILING

Company	Product	Report Number
Advanced Environmental Recycling Technologies, Inc.	Choicedek® Decking	ESR-2388
	Choicedek® Guardrail Systems	
AZEK Building Products, Inc.	AZEK Decking System	ESR-1667
Certainteed Corp.	Certainteed Kingston (Also Known as Keystone) Railing System	ESR-1555
	Certainteed PVC Deck Planks	NER-605
	Certainteed PVC Railing Systems	
Composatron Manufacturing, Inc	Premier Composite Decking	ESR-1481
	Premier Composite Railing System	NER-709, ESR-1481
Correct Building Products, LLC	CorrectDeck Railing	ESR-1341
Deceuninck North America	Kodiak Composite Rail System	ESR-1425
	Kodiak Composite Deck	
Digger Specialties, Inc.	Eagle and Cardinal Polyvinyl Railing	21-42
Eastern Wholesale Fence Co., Inc.	Illusions® Vinyl Railing System™	ESR-2995
EPOCH Composite Products, Inc.	Tam-Rail	22-22
Fairway Building Products	Fairway Railings (PVC)	
Gossen	Weather Ready Decking (PVC)	
Gracious Living Innovations Inc.	eON Decking	ESR-1300
Homeland Vinyl Products, Inc.	Gorilla Decking	ESR-1657
	Rectangular, T-Rail and R-Rail Guardrail Systems	
L.B. Plastics, Inc.	L.B. Plastics 3000 Series Plastic Railing	ESR-1912
LDI Composites Company	LDI Composites Geodeck™ Guardrail System	ESR-1369
	LDI Composites Geodeck™ Composite Decking	
Millennium Decking, Inc.	Millennium Decking System	ESR-1603
Railing Dynamics, Inc.	Endurance® Railing System	ESR-1849
Royal Crown Limited	Deck Lok Decking and Stair Tread	ESR-1051
Royal Outdoor Products	Brock Deck™ and Triple Crown® Fence	NER-705
Superior Plastic Products Inc.	Railing (Newport 3000 series) and T-Rail (1000 series) PVC	
TAMKO Building Products, Inc.	Epoch Evergrain Wood-Thermoplastic Composite Deck Boards	ESR-1625
	Epoch Evergrain Wood-Thermoplastic Composite Guardrail Systems	
Thermal Industries, Inc.	Dream™ Rail	97-55
	Dream™ Deck	

Revised (July 01, 2012)

Timbertech® Limited	5/4 Plank Timbertech® Decking	ESR-1400
	Timbertech® Ornamental Railing System	
Trex Company, Inc.	Trex Railing®	ESR-1848
	Trex® Decking	ESR-2387
UFP Ventures II, Inc.	Veranda® Decking	ESR-1573
US Fence	Williamsburg, Yorktown, Traditional vinyl guardrail assemblies (Yard Smart)	
Westech® Building Products, Inc.	PRESIDIO 6/12 Reversible Deck Board	ESR-2857
	Vinyl Guardrail Systems (Sentinel™ and Reliant™) and Presidio™ PVC Deck Systems	NER-710
	Vinyl Guardrail Systems (Sentinel™ and Reliant™) and Presidio™ PVC Railing	